7. Dimensions

7-1 1GM

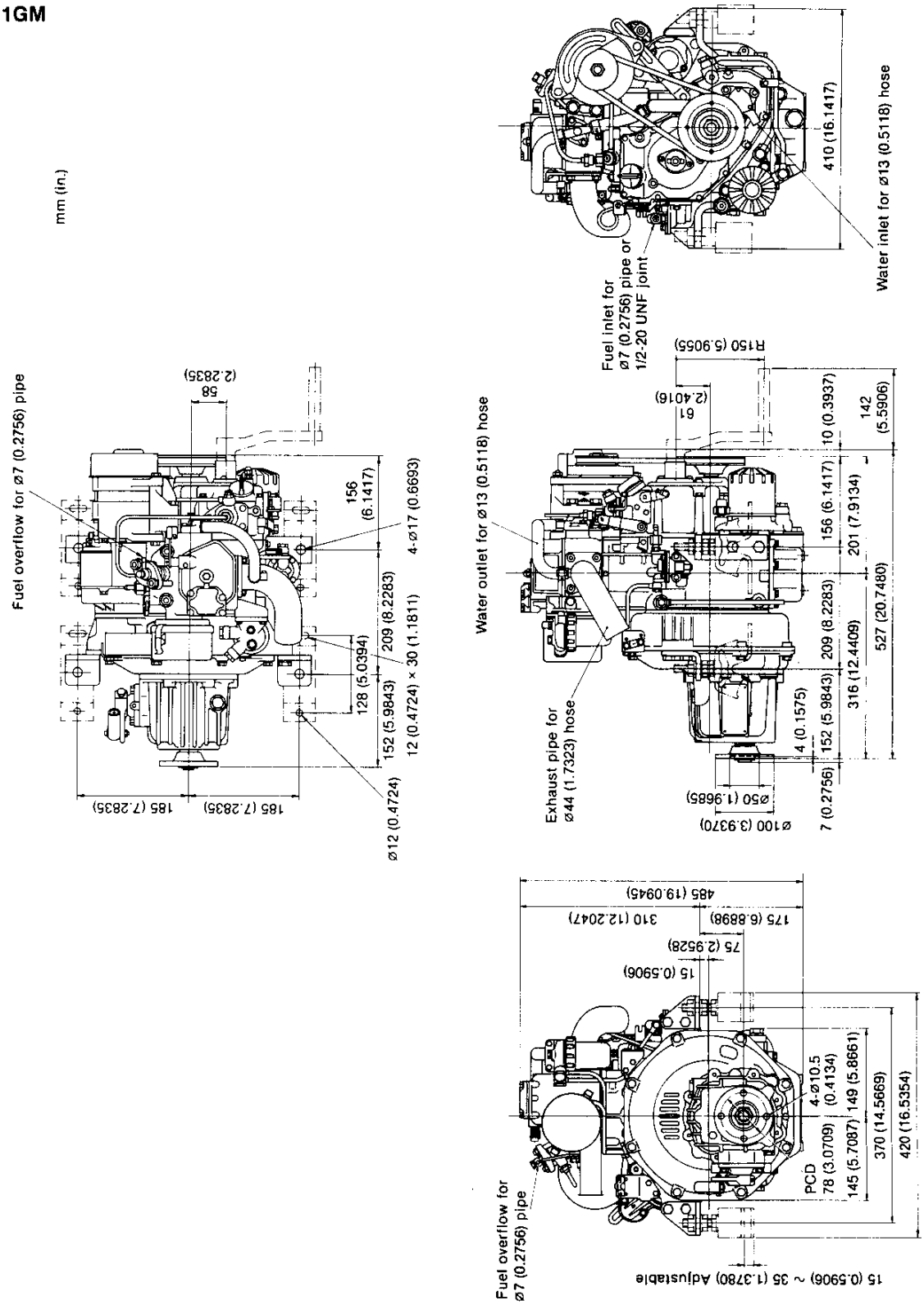

PDF created with pdfFactory trial version www.pdffactory.com